195 Series

FLUORESCENT

Wet

19511 | White Finish with a White Lens

19561 | White Finish with a Frosted Prismatic Lens

19515 | Black Finish with a White Lens

19565 | Black Finish with a Frosted Prismatic Lens

Standard Specifications

Housing	Hight Impact Polycarbonate (Specify Finish)
Lens	Impact Resistant Polycarbonate
Ballast	(*i*) 120V 60Hz Magnetic NPF (*ii*) 120V 60Hz Electronic NPF
Lamp(s)	Lamp(s) Included
Certification	Wet Location (for outdoor use)
Mounting	Wall or Ceiling Mountable

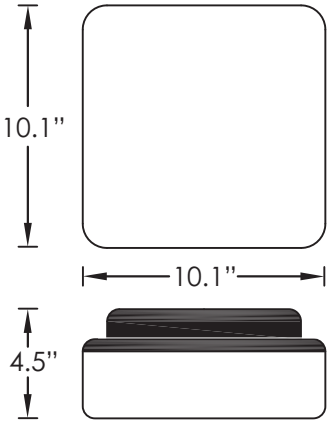

Replacement Parts

LENS-1951	White Impact Resistant Polycarbonate Lens
LENS-1956	Frosted Prismatic Impact Resistant Polycarbonate Lens

Product Family	Lens Type	Finish	Wattage	Options*
195				

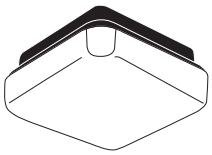

1 - White

6 - Frosted Prismatic

1 - White

5 - Black

13GU - (1)13W GU-24 (*ii*)	ALLK NL PE
13QE - (1)13W G24Q-1 (*ii*)	ALLK B2 NL PE PL SL
18GU - (1)18W GU-24 (*ii*)	ALLK NL PE
18QE - (1)18W G24Q-2 (*ii*)	ALLK B2 NL PE PL SL
36QE - (2)18W G24Q-2 (*ii*)	ALLK B2 NL PE PL SL
213GU - (2)13W GU-24 (*ii*)	ALLK NL PE
213QE - (2)13W G24Q-1 (*ii*)	ALLK B2 NL PE PL SL
218GU - (2)18W GU-24 (*ii*)	ALLK ES NL PE

Option Legend

27K	2700 Kelvin Warm White Light Temperature
30K	3000 Kelvin Warm White Light Temperature
35K	3500 Kelvin Medium White Light Temperature
41K	4100 Kelvin Cool White Light Temperature
50K	5000 Kelvin Full Spectrum Light Temperature
65K	6500 Kelvin Daylight Color Temperature
ALLK	Wattage comes in all kelvin above, choose one.
B2	Remote Battery Backup (2-Pin & 4-Pin CFL Only)
NL	No Lamp
PE	Photocell (120 Volt Only)
PL	Philips Lamp
SL	Sylvania Lamp

* May not be available in all wattages or combinations, please call factory. † Additional lead time may apply.