313 Series

c UL us Wet

FLUORESCENT

31311
White | White

31391
Clear | White

31315
White | Black

31395
Clear | Black

Standard Specifications

Housing	Impact Resistant Polycarbonate (Specify Finish)
Lens	UV Stabilized Acrylic (Specify Type)
Ballast	(*ii*) 120V 60Hz Electronic NPF
Lamp(s)	Lamp(s) Included
Certification	Wet Location Listed
Mounting	Wall Mount Only
Match	Post Mount Lighting 843 Series

Replacement Parts

LENS-3121	(6) UV Stabilized White Acrylic Panels
LENS-3129	(6) UV Stabilized Clear Acrylic Panels

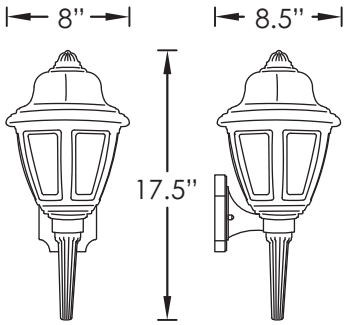

Product Family	Lens Type	Finish	Wattage	Options*
313				

1 - White

9 - Clear Textured

1 - White

5 - Black

13GU - (1)13W GU-24 (*ii*) ALLK NL PE PL

18GU - (1)18W GU-24 (*ii*) ALLK NL PE PL

23GU - (1)23W GU-24 (*ii*) ALLK NL PE PL

26GU - (1)26W GU-24 (*ii*) ALLK NL PE PL

INC - (1)Incandescent (*ii*) 60W Max E26 PE

Option Legend

27K	2700 Kelvin Warm White Light Temperature
35K	3500 Kelvin Medium White Light Temperature
41K	4100 Kelvin Cool White Light Temperature
ALLK	Wattage comes in all kelvin above, choose one.
NL	No Lamp
PE	Photocell (120 Volt Only)
PL	Philips Lamp

* May not be available in all wattages or combinations, please call factory.