INCON LIGHTING

845 Series

c UL us Wet

CFL/Incandescent

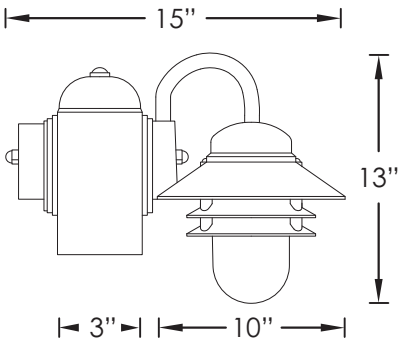

84591 | White

Pier Mounts

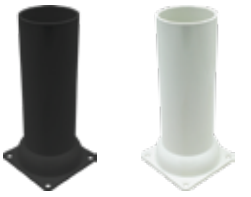

PMB PMW

84595 | Black

Standard Specifications

Housing	Impact Resistant Polycarbonate (Specify Finish)
Lens	UV Stabilized Acrylic
Ballast	120V 60Hz Electronic NPF
Lamp(s)	Lamp Included (CFL Only)
Certification	Wet Location Listed
Mounting	3" OD Post Mount Only

Replacement Parts

LENS-3801	White Acrylic Jar Lens
LENS-3809	Clear Ribbed Acrylic Jar Lens

Product Family	Lens Type	Finish	Wattage	Options *
845				

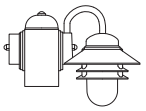

1 - White

9 - Clear Ribbed

1 - White

5 - Black

13GU - (1)13W GU-24	ALLK NL PE PL PMB PMW
18GU - (1)18W GU-24	ALLK NL PE PL PMB PMW
23GU - (1)23W GU-24	ALLK NL PE PL PMB PMW
INC - (1)Incandescent 60W Max E26	PMB PMW

Option Legend

27K	2700 Kelvin Warm White Light Temperature
35K	3500 Kelvin Medium White Light Temperature
41K	4100 Kelvin Cool White Light Temperature
ALLK	Wattage comes in all kelvin above, choose one.
NL	No Lamp
PE	Photocell (120 Volt Only)
PL	Philips Lamp (27K & 41K Only)
PMB	Pier Mount Black
PMW	Pier Mount White

† Additional lead time may apply. * May not be available in all wattages or combinations, please call factory.